Parallel and Perspective Projection

Róbert Bohdal

robert.bohdal@fmph.uniba.sk
https://flurry.dg.fmph.uniba.sk/webog/en/bohdal-teaching

Department of Algebra and Geometry
Faculty of Mathematics, Physics and Informatics
Comenius University Bratislava

Computer Graphics (1)
Lecture 6



Contents

1 Projection

2 Parallel Projection

3 Perspective Projection

4 Comparison of Projections



Projection

- We describe a projection by a map $f : D \to \mathbb{R}^n$, where $D \subseteq \mathbb{R}^m$ is the domain in a space of dimension m. The target space has dimension n, with $n < m$.
- In computer graphics, we usually project objects from three-dimensional (3D) space onto a two-dimensional (2D) plane. Higher-dimensional objects, such as 4D fractals, can be projected directly into 2D or in two stages: first into 3D (for example, by orthogonal projection) and then from 3D into 2D.
- To project from 3D into 2D, we choose a projection plane in 3D space and specify how each point is projected onto it.
- To describe the plane and the position of a point, we use a global coordinate system (O, x, y, z) in space and a local coordinate system (O', x', y') in the plane. Projection maps a point with coordinates (x, y, z) to a point with coordinates (x', y') in the plane.



Projection

- We live in a 3D world, but monitors and phone screens display 2D images. Cameras likewise record two-dimensional images.
- The pinhole camera model illustrates perspective projection: the pinhole is the center of projection, and the sensor plane is the image plane.
- Projection maps 3D points in a scene to 2D points in the projection plane.
- The two most common types are **parallel** and **perspective** projection. Parallel projection can be viewed as a central projection whose center is a point at infinity.
- We can specify a projection geometrically by its plane and direction for parallel projection, or by its plane and center for perspective projection. Alternatively, we can specify it algebraically using equations or a matrix.
- Each type of projection has advantages and limitations.
- Parallel projection:
  - \+ Suitable for measuring dimensions when the scale factor in each direction is taken into account.
  - – Angles are generally distorted, although angles in planes parallel to the projection plane are preserved.
  - – The image can look less realistic.
- Perspective projection:
  - \+ More distant objects of the same size appear smaller, as they do in human vision.
  - – Distances, angles, and parallelism are generally not preserved.



Parallel Projection

- Parallel projection is specified by a projection plane and a direction of projection (given by a 3D vector or a line). If the direction is perpendicular to the plane, the projection is orthographic. Otherwise, it is oblique. The direction **cannot** be parallel to the plane. Why?
- The projected point P' is the intersection of the projection plane π with the line l through P in the given direction $\mathbf{u}$.

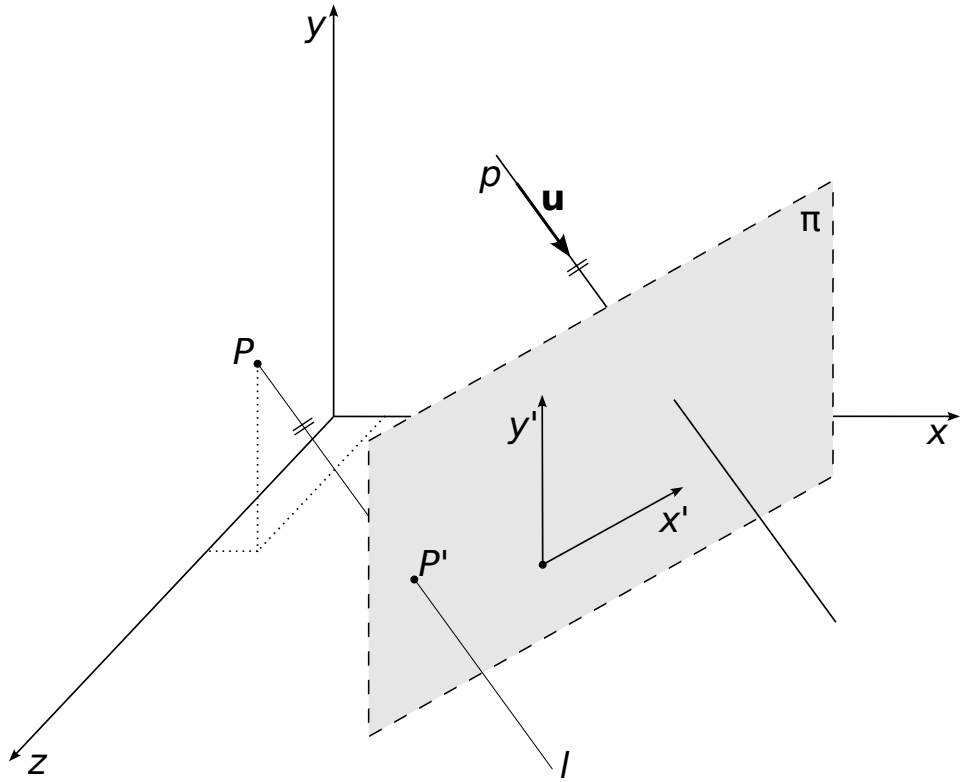

Parallel Projection

- In practice, parallel projection is usually expressed by a matrix representing an affine map $f : \mathbb{R}^3 \to \mathbb{R}^2$:

$$\begin{pmatrix} x' \\ y' \\ 1 \end{pmatrix} = \begin{pmatrix} a_{11} & a_{12} & a_{13} & a_{14} \\ a_{21} & a_{22} & a_{23} & a_{24} \\ 0 & 0 & 0 & 1 \end{pmatrix} \cdot \begin{pmatrix} x \\ y \\ z \\ 1 \end{pmatrix}$$

- Familiar forms of orthographic projection include isometric, dimetric, and trimetric projection, as well as Monge's projection and *multiview projection* (front view, top view, and side view). Oblique projections include cabinet, cavalier, and military projection.



Example 1. Orthographic Projection

The projection plane is the xy-plane. Its coordinate axes coincide with the x- and y-axes. The direction of projection is along the negative z-axis and is given by the vector $(0, 0, -1)$.

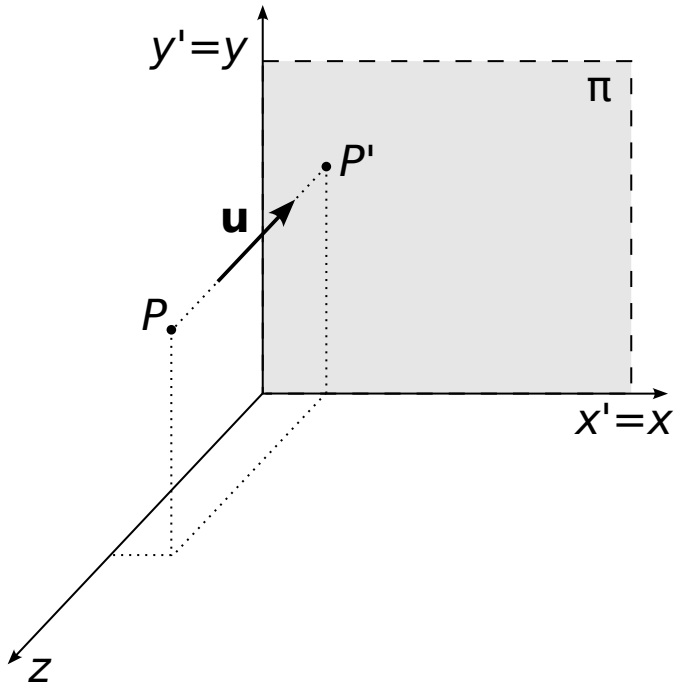

The equations for this orthographic projection can be written in matrix form:

$$\begin{pmatrix} x' \\ y' \\ 1 \end{pmatrix} = \begin{pmatrix} 1 & 0 & 0 & 0 \\ 0 & 1 & 0 & 0 \\ 0 & 0 & 0 & 1 \end{pmatrix} \cdot \begin{pmatrix} x \\ y \\ z \\ 1 \end{pmatrix}$$



Example 2. Oblique Projection – Cabinet Projection

The projection plane is the xy-plane, with axes coinciding with the x- and y-axes. The direction of projection is $(-1/(2\sqrt{2}), -1/(2\sqrt{2}), -1)$. The unit vectors along the x- and y-axes project to vectors of length 1, while the unit vector along the z-axis projects to a vector of length $1/2$. In cavalier projection, the projected unit vector along the z-axis also has length 1.

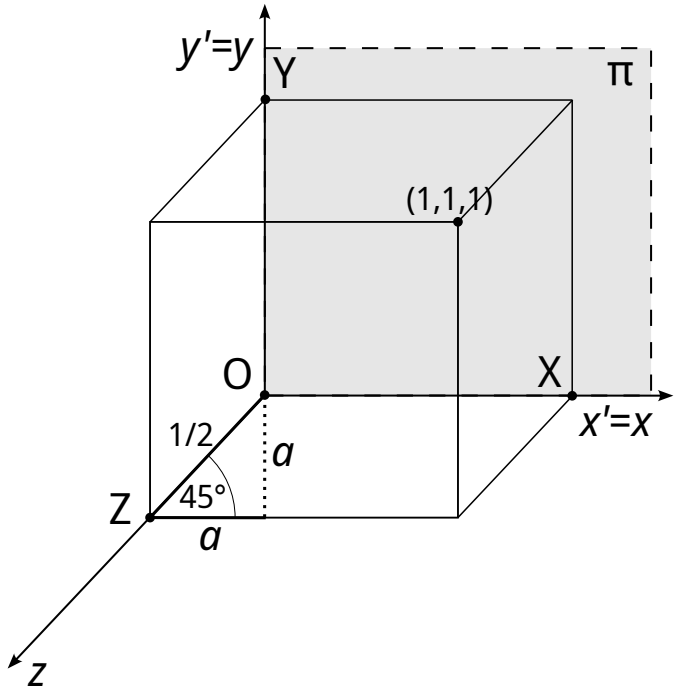

First, we calculate the length a. From each coordinate, x and y, we then subtract az. This mapping acts like a shear in both directions at once.



Example 2. Oblique Projection – Cabinet Projection

To find the length a, we use

$$a^2 + a^2 = \left(\frac{1}{2}\right)^2 \Rightarrow 2a^2 = \frac{1}{4} \Rightarrow a^2 = \frac{1}{8} \Rightarrow a = \frac{1}{2\sqrt{2}}$$

The projection equations are

$$x' = x - \frac{1}{2\sqrt{2}}z$$

$$y' = y - \frac{1}{2\sqrt{2}}z$$

In matrix form, the projection is

$$\begin{pmatrix} x' \\ y' \\ 1 \end{pmatrix} = \begin{pmatrix} 1 & 0 & -\frac{1}{2\sqrt{2}} & 0 \\ 0 & 1 & -\frac{1}{2\sqrt{2}} & 0 \\ 0 & 0 & 0 & 1 \end{pmatrix} \cdot \begin{pmatrix} x \\ y \\ z \\ 1 \end{pmatrix}$$

We can also derive the projection by solving a system of equations subject to the conditions $(0,0,0) \mapsto (0,0)$, $(1,0,0) \mapsto (1,0)$, $(0,1,0) \mapsto (0,1)$, $(0,0,1) \mapsto (-\frac{1}{2\sqrt{2}}, -\frac{1}{2\sqrt{2}})$.



Example 3. Orthographic Projection – Isometric View

- Consider orthographic projection onto the plane through $(1,0,0)$, $(0,1,0)$, and $(0,0,1)$.
- The projection plane is $\pi : x + y + z = 1$ and the direction of projection is $(1,1,1)$.
- The local coordinate axes x' and y' are perpendicular in the projection plane ($x' \perp y'$).
- We choose the local origin O' to be the projection of the global origin. In the figure, this is the centroid of the triangle.

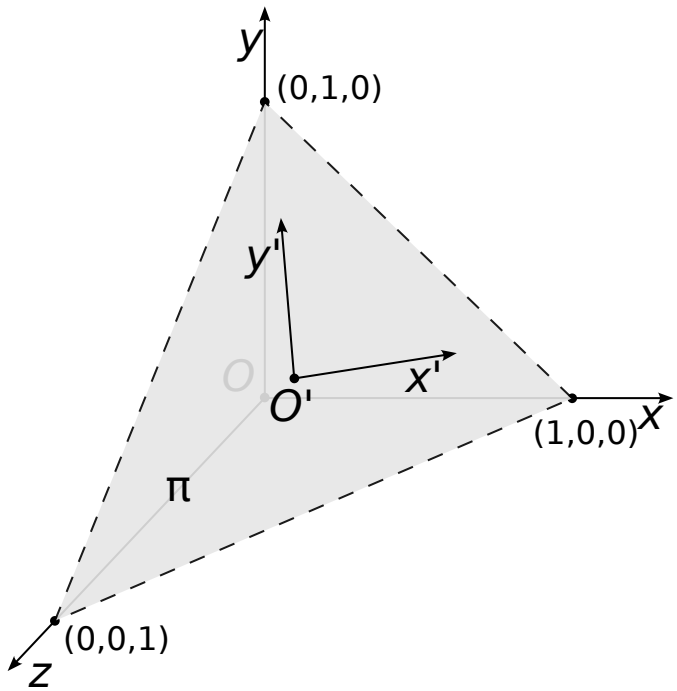



Example 3. Orthographic Projection – Isometric View

We scale the image so that the projected unit vectors along all three axes have length 1. At this scale, the following conditions determine the projection equations:
$(0,0,0) \mapsto (0,0)$, $\mathbf{x} = (1,0,0) \mapsto (\frac{\sqrt{3}}{2}, -\frac{1}{2})$, $\mathbf{y} = (0,1,0) \mapsto (0,1)$, $\mathbf{z} = (0,0,1) \mapsto (-\frac{\sqrt{3}}{2}, -\frac{1}{2})$
Alternatively, we can use $P'(x', y') = x \cdot \text{proj}_\pi(\mathbf{x}) + y \cdot \text{proj}_\pi(\mathbf{y}) + z \cdot \text{proj}_\pi(\mathbf{z})$, where:
$\text{proj}_\pi(\mathbf{x}) = (\frac{\sqrt{3}}{2}, -\frac{1}{2})$, $\text{proj}_\pi(\mathbf{y}) = (0,1)$, and $\text{proj}_\pi(\mathbf{z}) = (-\frac{\sqrt{3}}{2}, -\frac{1}{2})$.

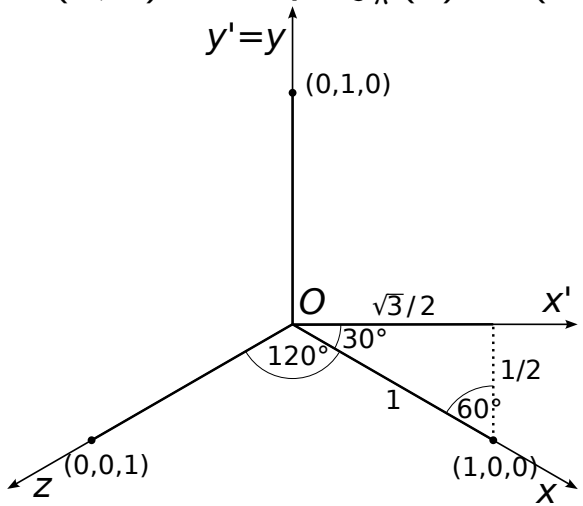

The matrix for the scaled isometric view is

$$\begin{pmatrix} x' \\ y' \\ 1 \end{pmatrix} = \begin{pmatrix} \frac{\sqrt{3}}{2} & 0 & -\frac{\sqrt{3}}{2} & 0 \\ -\frac{1}{2} & 1 & -\frac{1}{2} & 0 \\ 0 & 0 & 0 & 1 \end{pmatrix} \cdot \begin{pmatrix} x \\ y \\ z \\ 1 \end{pmatrix}$$

These equations give an isometric view enlarged by a factor of $\sqrt{3/2}$ relative to the orthographic isometric projection.



Example 3. Isometric Projection – Alternative Derivation

We can also derive the equations by expressing the scene in a rotated coordinate system in which the projection direction is parallel to the z-axis. The projection plane is then parallel to the xy-plane, so orthographic projection simply drops the z-coordinate.
The required orientation is obtained by composing the rotations $R_y\left(\frac{\pi}{4}\right)$ and $R_x(\varphi)$, where $\varphi = \arctan\left(\frac{1/3}{\sqrt{(1/3)^2+(1/3)^2}}\right) = \arctan\left(\frac{1}{\sqrt{2}}\right)$.

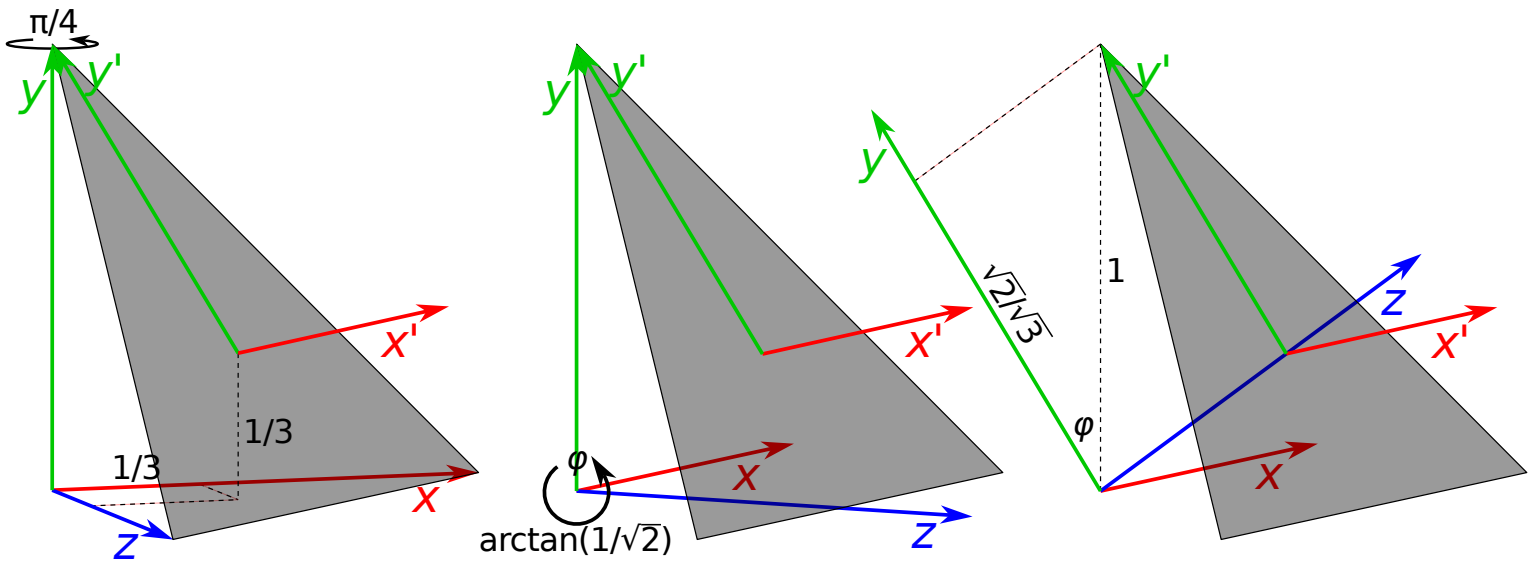

Example 3. Isometric Projection – Alternative Derivation

Substituting $R_y\left(\frac{\pi}{4}\right) = \begin{pmatrix} \cos\frac{\pi}{4} & 0 & -\sin\frac{\pi}{4} & 0 \\ 0 & 1 & 0 & 0 \\ \sin\frac{\pi}{4} & 0 & \cos\frac{\pi}{4} & 0 \\ 0 & 0 & 0 & 1 \end{pmatrix} = \begin{pmatrix} \frac{\sqrt{2}}{2} & 0 & -\frac{\sqrt{2}}{2} & 0 \\ 0 & 1 & 0 & 0 \\ \frac{\sqrt{2}}{2} & 0 & \frac{\sqrt{2}}{2} & 0 \\ 0 & 0 & 0 & 1 \end{pmatrix}$ and

$R_x(\varphi) = R_x\left(\arctan\left(\frac{1}{\sqrt{2}}\right)\right) = \begin{pmatrix} 1 & 0 & 0 & 0 \\ 0 & \frac{\sqrt{2}}{\sqrt{3}} & -\frac{1}{\sqrt{3}} & 0 \\ 0 & \frac{1}{\sqrt{3}} & \frac{\sqrt{2}}{\sqrt{3}} & 0 \\ 0 & 0 & 0 & 1 \end{pmatrix}$, and composing the rotations as

$R_x(\varphi) \cdot R_y\left(\frac{\pi}{4}\right)$ gives the following matrix for isometric projection:

$$\begin{pmatrix} x' \\ y' \\ 1 \end{pmatrix} = \begin{pmatrix} \frac{\sqrt{2}}{2} & 0 & -\frac{\sqrt{2}}{2} & 0 \\ -\frac{\sqrt{6}}{6} & \frac{\sqrt{6}}{3} & -\frac{\sqrt{6}}{6} & 0 \\ 0 & 0 & 0 & 1 \end{pmatrix} \cdot \begin{pmatrix} x \\ y \\ z \\ 1 \end{pmatrix}$$

Orthographic projection foreshortens all three unit axis vectors to length $\sqrt{2/3}$. To obtain the matrix for the enlarged isometric view, we therefore multiply the first two rows by $\sqrt{3/2} = 1/\cos(\varphi)$.



Perspective Projection

- Perspective projection, also called central projection, is widely used in architecture to display buildings and other large structures.
- In perspective projection, the projection lines pass through a single point, the centre of projection.
- Consider the three mutually perpendicular principal directions of an object, such as the edge directions of a rectangular box. Their orientation relative to the projection plane determines the type of perspective:
  - **One-point perspective**. Only one of the three principal directions has a **finite** vanishing point, usually the depth direction. The other two directions are parallel to the projection plane.
  - **Two-point perspective**. Two of the three principal directions each have a finite vanishing point. The third direction, such as the direction of the vertical edges of a box, is parallel to the projection plane.
  - **Three-point perspective**. All three principal directions have distinct finite vanishing points. None of them is parallel to the projection plane.
- The number of principal directions that are not parallel to the projection plane gives the number of finite vanishing points: one, two, or three.

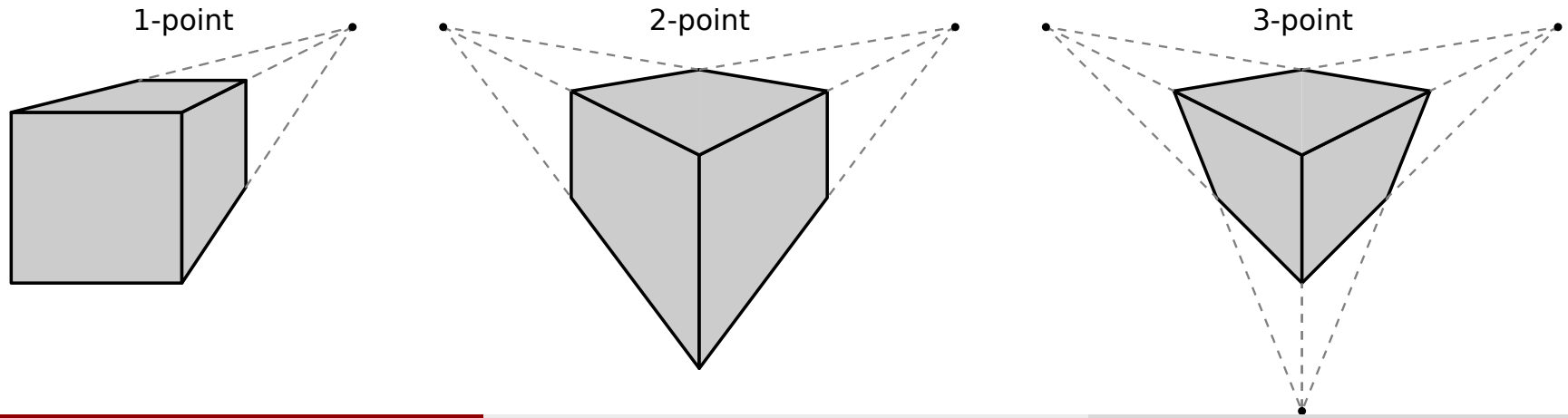

Perspective Projection

- Perspective projection is specified by its centre S (a point in 3D space) and its projection plane π (a plane with a chosen coordinate system). The centre must lie outside the plane.
- The image of a point $P \neq S$ in $\mathbb{R}^3$ is the intersection of the projection line $p = SP$ with the projection plane π, provided that line p is not parallel to π.
- This projection is projective. In general it does not preserve parallelism or ratios of segments on a line, so it is not an affine map.

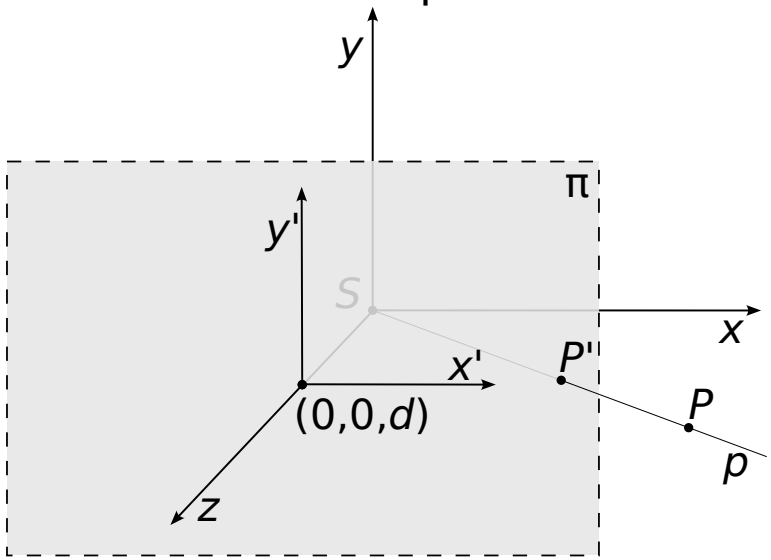

There is a whole plane whose points do not have a finite projection. It is the plane passing through the centre S and parallel to the projection line π. Every point in this plane except the centre S projects to a point at infinity. The projection of the centre S itself is not defined



Projective Space and Homogeneous Coordinates

Adding points at infinity to affine space gives projective space.

- In three-dimensional **projective** space, every nonzero quadruple (X, Y, Z, W) represents a point. Two quadruples represent the same point if and only if one is a nonzero scalar multiple of the other: $(X : Y : Z : W) = (\lambda X : \lambda Y : \lambda Z : \lambda W)$, where $\lambda \neq 0$.
- If $W \neq 0$, the point is a **finite point**. Dividing by the last coordinate (dehomogenization) gives its affine coordinates: $(X : Y : Z : W) \mapsto \left(\frac{X}{W}, \frac{Y}{W}, \frac{Z}{W}\right)$. Conversely, the affine point (x, y, z) can be written as $(x : y : z : 1)$.
- If $W = 0$, the point is a **point at infinity** $(X : Y : Z : 0)$, where $(X, Y, Z) \neq (0, 0, 0)$.

- In projective space, two distinct parallel lines meet at a unique point at infinity. This point represents their common direction.
- If a line has direction vector (a, b, c), its point at infinity is $(a : b : c : 0)$. For example, all lines parallel to the x-axis have the same point at infinity $(1 : 0 : 0 : 0)$.
- In the projective plane, all points at infinity form the **line at infinity**. In three-dimensional projective space, they form the **plane at infinity**, given by $W = 0$.



Example 1. Simple Perspective Projection

Let S be a given centre of projection with coordinates $(0, 0, 0)$, and let the projection plane be given by the equation $z = d$, where $d \neq 0$. Consider a point $P = (x, y, z)$ with $z \neq 0$, and let (x', y') be the coordinates of its image P' in the projection plane. By similar triangles, we obtain:

$$y/z = y'/d \Rightarrow y' = d\frac{y}{z}$$

and

$$x/z = x'/d \Rightarrow x' = d\frac{x}{z}$$

The projected point has spatial coordinates $P' = (x', y', d)$ and coordinates (x', y') in the projection plane.

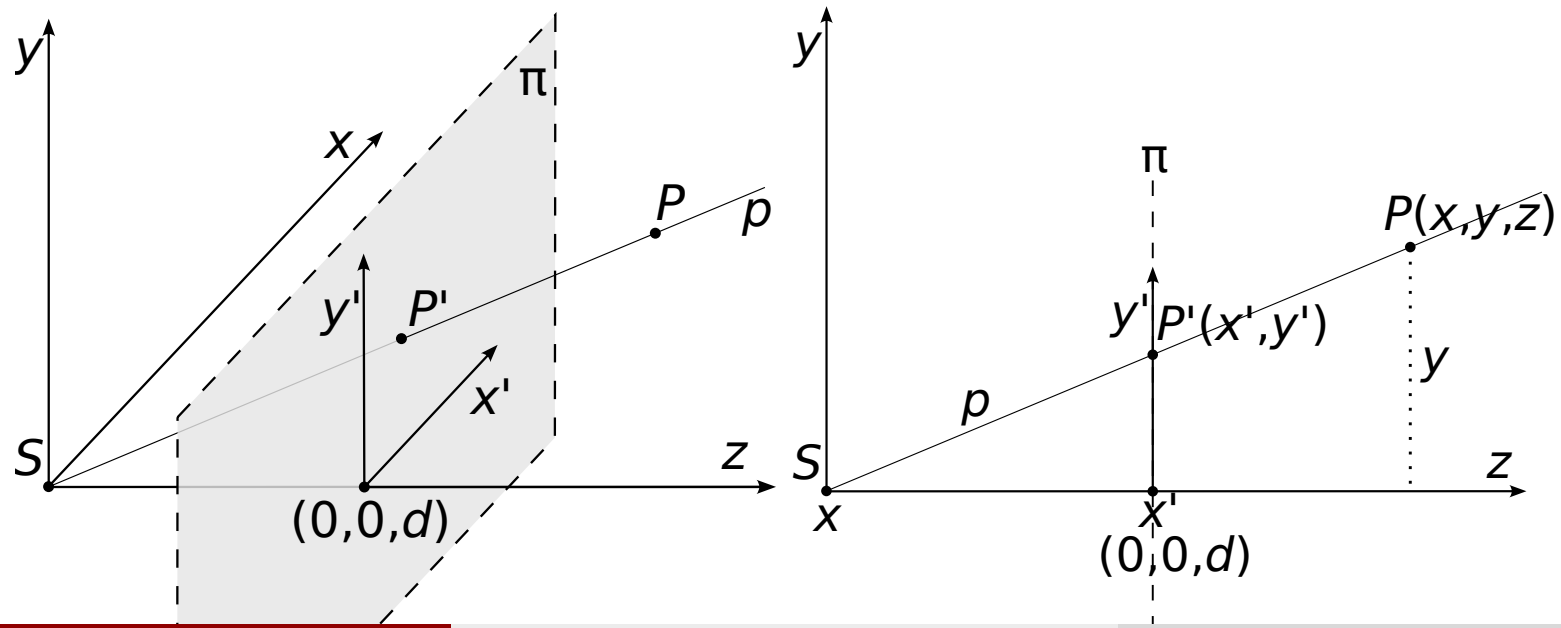

Perspective Projection in Homogeneous Coordinates

Let $S = (0, 0, 0)$ be the centre of projection and let the projection plane be given by $z = d$, where $d \neq 0$. For a point $P = (X : Y : Z : W)$, we calculate the homogeneous coordinates of its projection using the projection matrix as follows:

$$\begin{pmatrix} X' \\ Y' \\ W' \end{pmatrix} = \begin{pmatrix} d & 0 & 0 & 0 \\ 0 & d & 0 & 0 \\ 0 & 0 & 1 & 0 \end{pmatrix} \begin{pmatrix} X \\ Y \\ Z \\ W \end{pmatrix} = \begin{pmatrix} dX \\ dY \\ Z \end{pmatrix}$$

- If $Z \neq 0$, the image $P' = (dX : dY : Z)$ is a finite point. Dividing by the last coordinate $W' = Z$ gives its affine coordinates in the projection plane:

$$(x', y') = \left(\frac{dX}{Z}, \frac{dY}{Z} \right)$$

- If $Z = 0$ and $(X, Y) \neq (0, 0)$, the image is a point at infinity $P' = (dX : dY : 0)$. For example, every finite point in the xy-plane except the centre S projects to a point at infinity.
- For the centre $S = (0 : 0 : 0 : 1)$, the matrix gives the zero vector. It represents no projective point, so the projection of the centre S is undefined.



How Perspective and Parallel Projection Are Related

- In perspective projection, all projection lines pass through a common point S, which does not lie on the projection line.
- In projective space, parallel lines also have a common point: the point at infinity representing their direction.
- We choose a projective transformation that maps the centre S to the point at infinity in the direction of the z'-axis. We apply it to the entire scene, including the projection lines and the projection plane.
- After the transformation, the projection lines of points with a positive z-coordinate will be parallel to the z'-axis, and the image of the projection line will be the plane $z' = 0$. We then project the transformed scene **orthogonally** onto this plane.



Finding a Projective Transformation of the Scene

The centre of projection is $S = (0, 0, 0)$, and the projection plane π is given by $z = d$, where $d > 0$. We consider points with $z > 0$. We look for a projective transformation of the form

$$\begin{pmatrix} X' \\ Y' \\ Z' \\ W' \end{pmatrix} = \underbrace{\begin{pmatrix} d & 0 & 0 & 0 \\ 0 & d & 0 & 0 \\ A & B & C & D \\ 0 & 0 & 1 & 0 \end{pmatrix}}_{T} \begin{pmatrix} X \\ Y \\ Z \\ W \end{pmatrix}.$$

We represent the affine point (x, y, z) in homogeneous coordinates by the quadruple $(X, Y, Z, W) = (x, y, z, 1)$. Dividing by the coordinate $W' = z$ gives

$$x' = d\frac{x}{z},\ y' = d\frac{y}{z},\ z' = \frac{Ax + By + Cz + D}{z}$$

The coordinates x', y' already give the desired perspective image. The coefficients A, B, C, D determine the transformed depth z'.



Determining the Transformation Coefficients

1. The center S must map to the point at infinity in the direction of the z'-axis: $(0:0:0:1) \mapsto (0:0:D:0)$. Hence $D \neq 0$.
2. We require the direction of the x-axis to be preserved: $(1:0:0:0) \mapsto (d:0:A:0)$. This gives $A = 0$.
3. We require the direction of the y-axis to be preserved: $(0:1:0:0) \mapsto (0:d:B:0)$. This gives $B = 0$.
4. The projection plane $z = d$ must map to the plane $z' = 0$. Its points must therefore satisfy $Cd + D = 0 \;\Rightarrow D = -dC$.

Since $d > 0$ and $D \neq 0$, we have $C \neq 0$. The matrix T is nonsingular because $\det(T) = d^3 C \neq 0$.



Orthographic Projection of the Transformed Scene

For simplicity, let $d = 1$ and $C = 1$, so $D = -1$. This gives

$$\begin{pmatrix} X' \\ Y' \\ Z' \\ W' \end{pmatrix} = \begin{pmatrix} 1 & 0 & 0 & 0 \\ 0 & 1 & 0 & 0 \\ 0 & 0 & 1 & -1 \\ 0 & 0 & 1 & 0 \end{pmatrix} \begin{pmatrix} x \\ y \\ z \\ 1 \end{pmatrix} = \begin{pmatrix} x \\ y \\ z - 1 \\ z \end{pmatrix}$$

Dividing by $W' = z$ gives the Cartesian coordinates of the transformed point. Projecting this point orthogonally onto the plane $z' = 0$ gives a point with coordinates (u, v) in that plane:

$$(x, y, z) \xrightarrow{T} \underbrace{\left(\frac{x}{z}, \frac{y}{z}, 1 - \frac{1}{z}\right)}_{\text{transformed point}} \xrightarrow{\text{orthographic projection}} \underbrace{\left(\frac{x}{z}, \frac{y}{z}\right)}_{\text{projected coordinates } (u,v)}$$

Direct perspective projection of the original point onto the plane $z = 1$ gives the same coordinates (u, v). We use the depth coordinate z' to determine visibility.



Transformed Depth, the Z-Buffer and Clipping

- **Depth ordering**. If $0 < z_1 < z_2$, then $z_2' - z_1' = \frac{1}{z_1} - \frac{1}{z_2} = \frac{z_2 - z_1}{z_1 z_2} > 0$, so $z_1' < z_2'$.
- **Z-buffer**. If the projected triangle has non-zero area, the transformed depth z' of each point in the triangle is an affine function of its projected coordinates (u, v). During rasterisation, we can therefore linearly interpolate z' from the depth values at the vertices.
- **Clipping**. For a rectangular viewing window, the transformation maps the view frustum to an axis-aligned box. In the graphics pipeline, we clip in homogeneous coordinates before dividing by W'.



Comparison of Projections in Computer Graphics

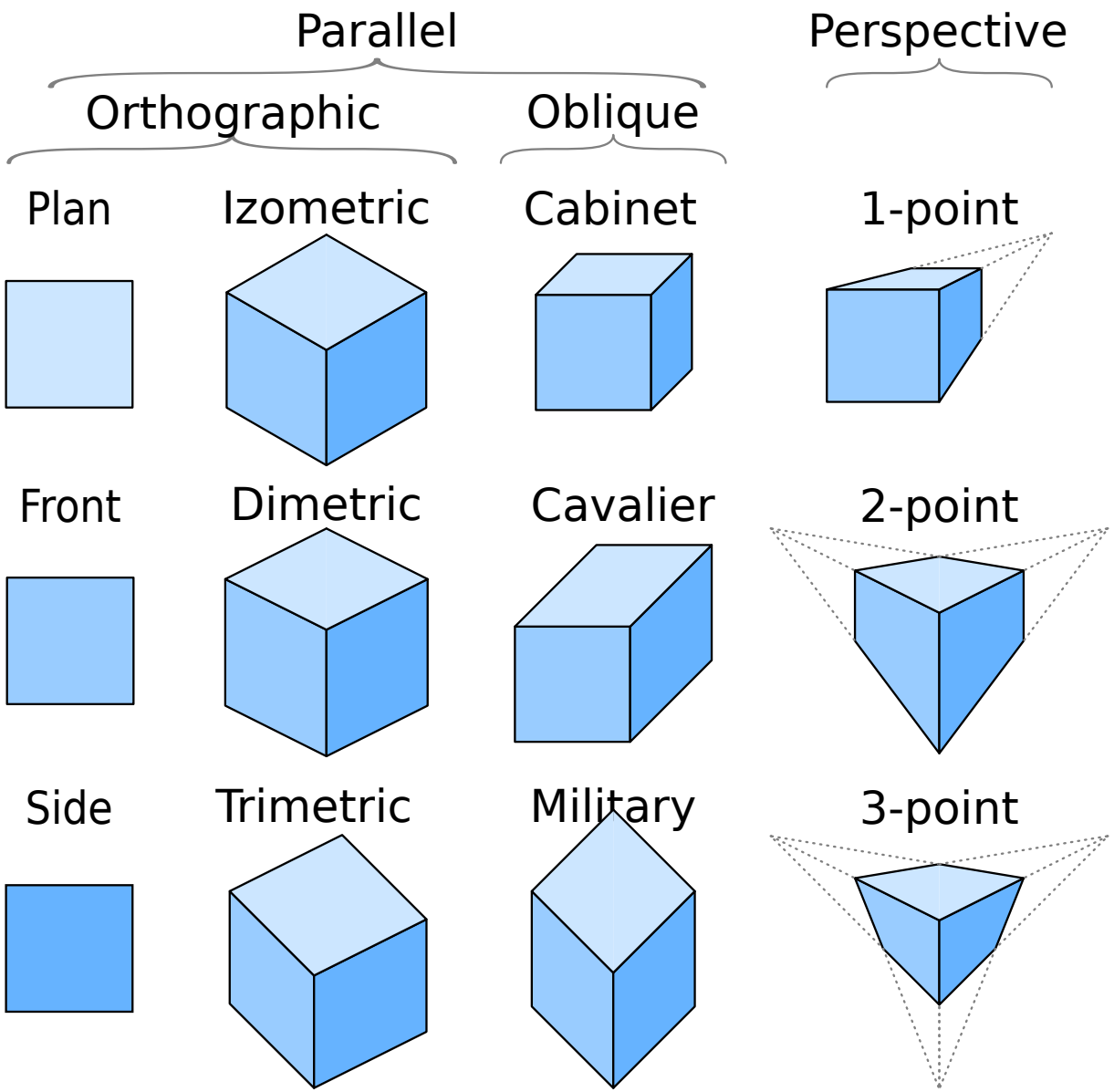

Applications of Projection

The final lecture on the *graphics pipeline* will cover projection in OpenGL and similar graphics APIs in more detail.

